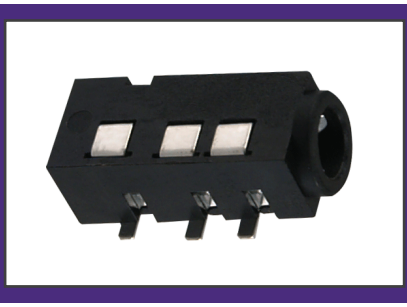

2D Drawing	IGES	STEP	3D PDF
Solder Profile	CofC RoHS Compliant	CofC REACH Compliant	UL Plastic File
Certificate of Origin	Check Stock	Request a Sample	Send Us An Email

Generated Part Number

STX-35331-4N-TR-1

Part Number Builder

STX-35331	–	4	N	TR
Series		Number of Pins	Threading Option	Packaging

Series
STX-35331 - Surface Mount 3.5mm Audio Jack

Number of Pins
4 - Pins

Threading Option
N - Non-Threaded Barrel

Packaging
TR - Tape and Reel

Contact Kycon for other options

AUDIO JACKS: STX-35331 Series
Surface Mount 3.5mm Audio Jack

Product Features
Offered in a 4-Pole Version
Used in Devices Such as Audio Equipment, Cell Phones, or Digital Still Camera
Complies with EIA Standards
CSA/NRTL Certified File No. LR78160

Performance Specifications
Materials and Finish
Housing
High Temperature Thermoplastic, UL 94V-0 Rated,
Color: Black
Contact Material: Copper Alloy,
Contact Plating: 10u" Min. Silver Plated

Electrical Characteristics
Rated Voltage: 20V DC
Rated Current: 1A
Insulation Resistance:
100 Megohms Min. at 500V DC
Contact Resistance:
50 Milliohms Max. Initial,
100 Milliohms Max. After 5K Cyc.
Dielectric Withstanding Voltage:
500V AC RMS for 1 Minute

Mechanical Characteristics
Insertion Force: 0.3 Kg - 3.0 Kg
Withdrawal Force: 0.3 Kg - 3.0 Kg
Durability: 5000 Mating Cycles Min.
Operating Temperature-25°C to + 70°C
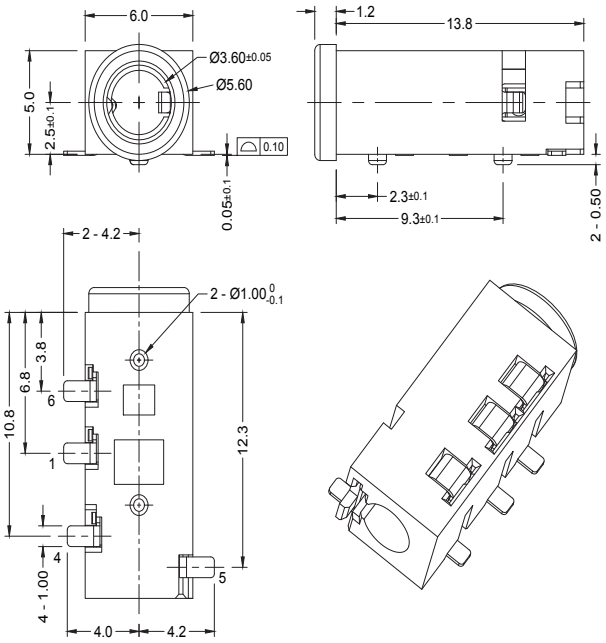
STX-35331
Dimensions in mm